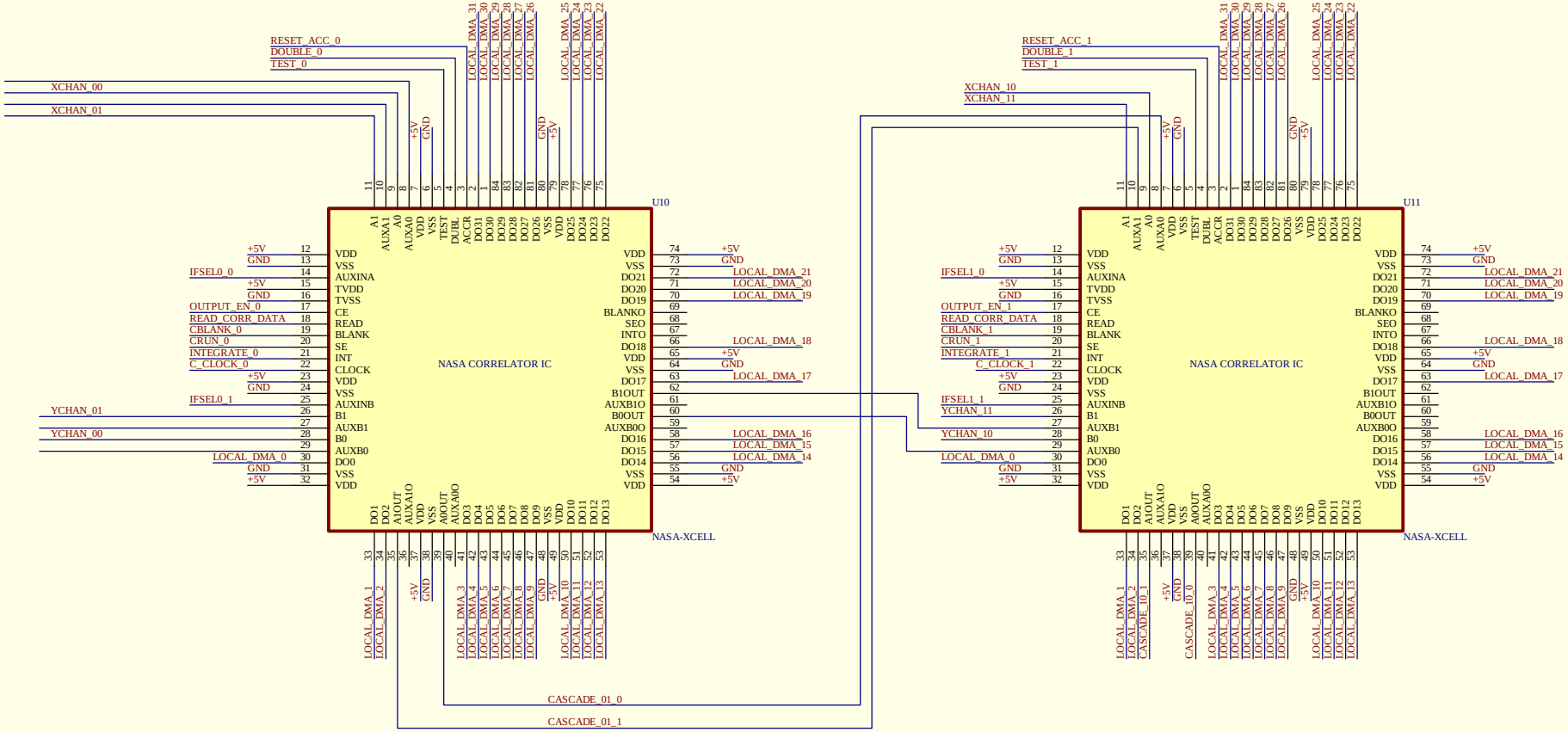

Title		
Size A3	Number	Revision
Date: 1-Dec-1998		Sheet of
File: L:\PROJECTS\..\MBCOR_4.SCH		Drawn By: