CRAFT

Fast Radio Bursts with ASKAP

ASKAP2016 - 8 June 2016
Keith Bannister - CASS

Thanks!

- Andrew Brown
- John Tuthill
- Aidan Hotan
- Maxim Voronkov
- Ryan Shannon

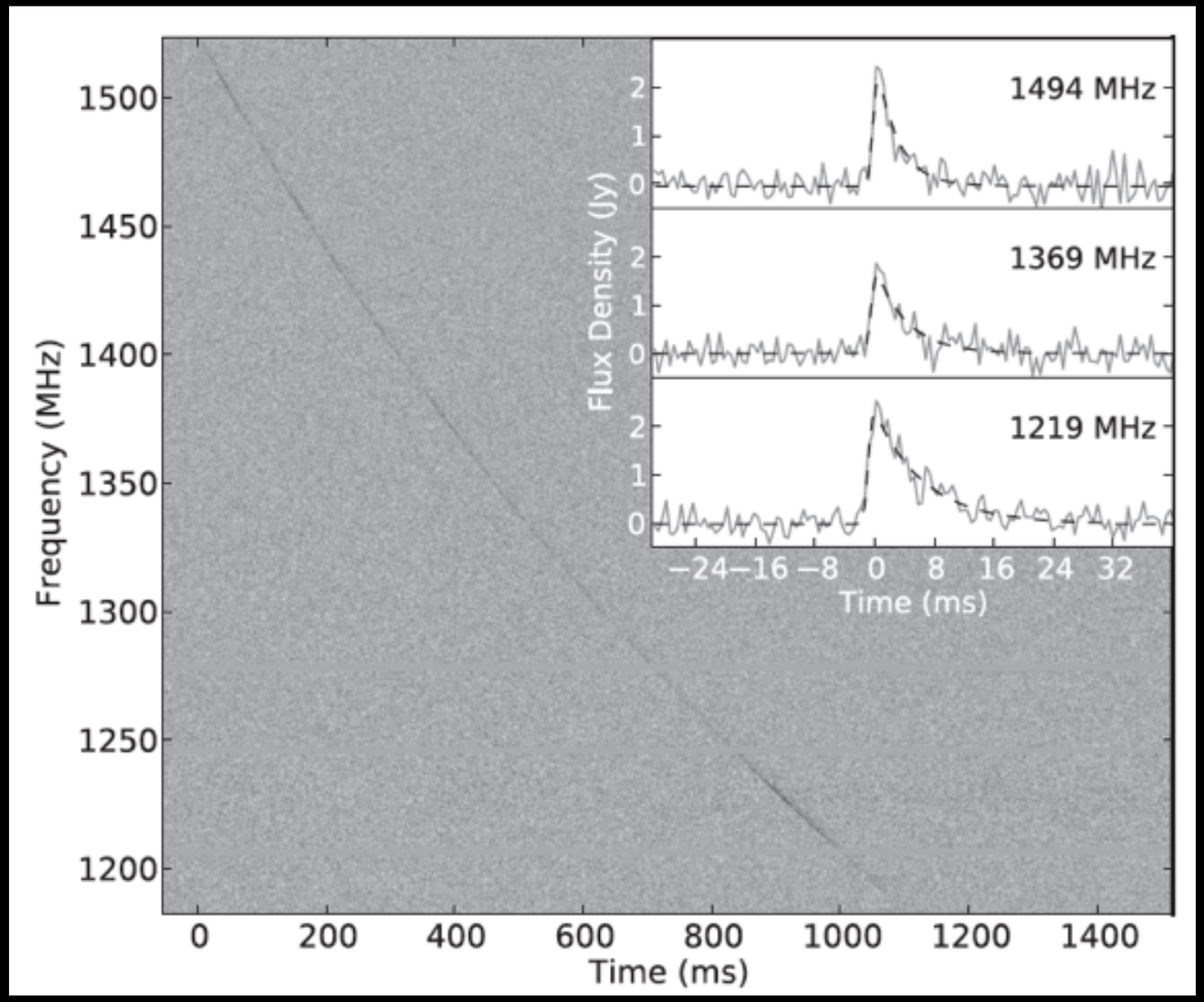

Fast Radio Bursts

After 9 years, we still don't know what they are

CRAFT - The near future

- Fast autocorrelations from beamformers:
  - 1 ms x 336 x 1 MHz channels x 36 beams x 2 polarisations x 12 antennas
- Commensal
- Write spectra to disk
- Search offline

	Fluence Sensitivity (Jy ms 8 σ)	FoV (deg^2)
ASKAP-12 Fly's eye	20	360
ASKAP-12 Incoherent	6	30
UTMOST (current)	1.3	8
Parkes	0.3	0.6

CRAFT - the near future

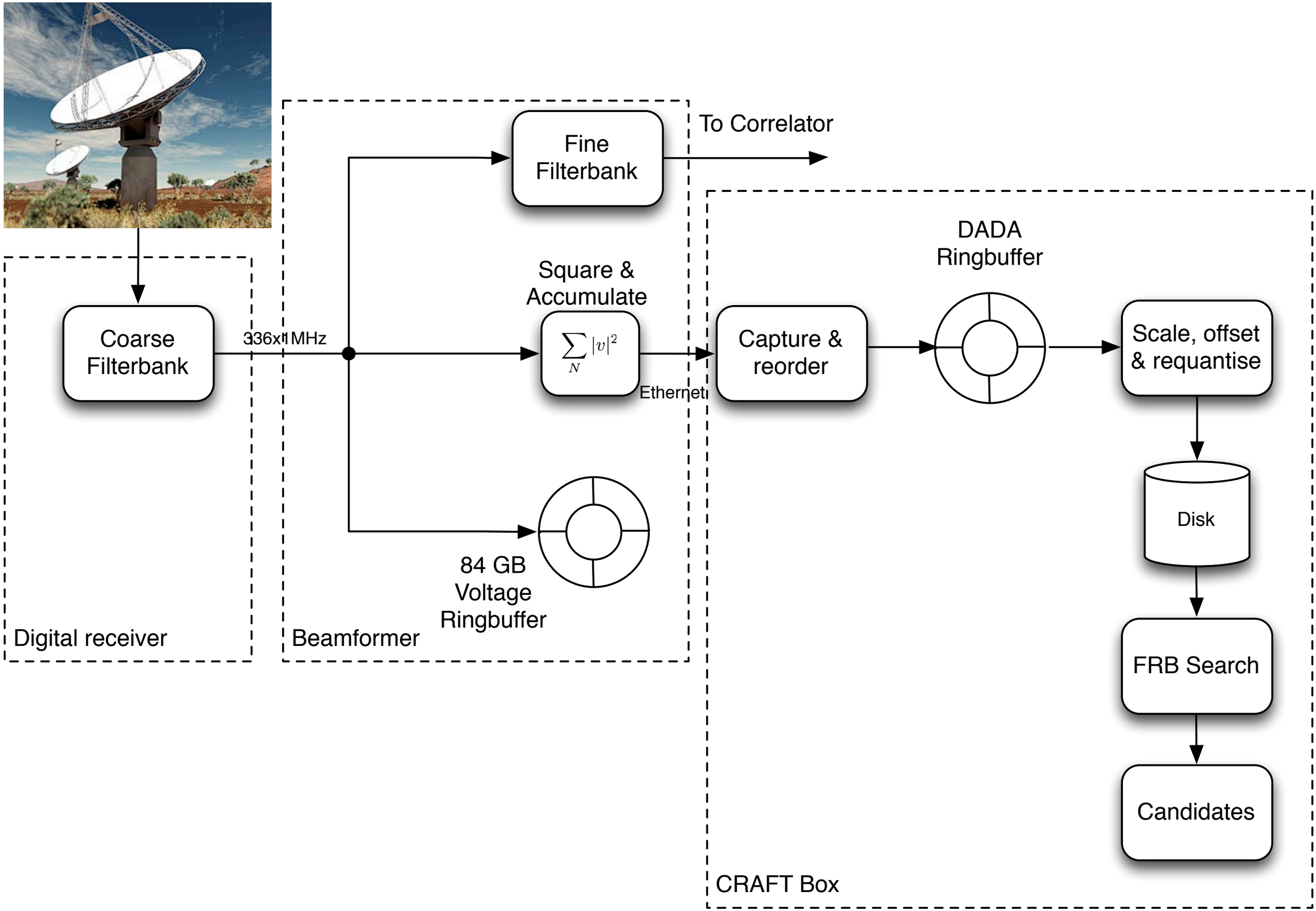

CRAFT - the near future

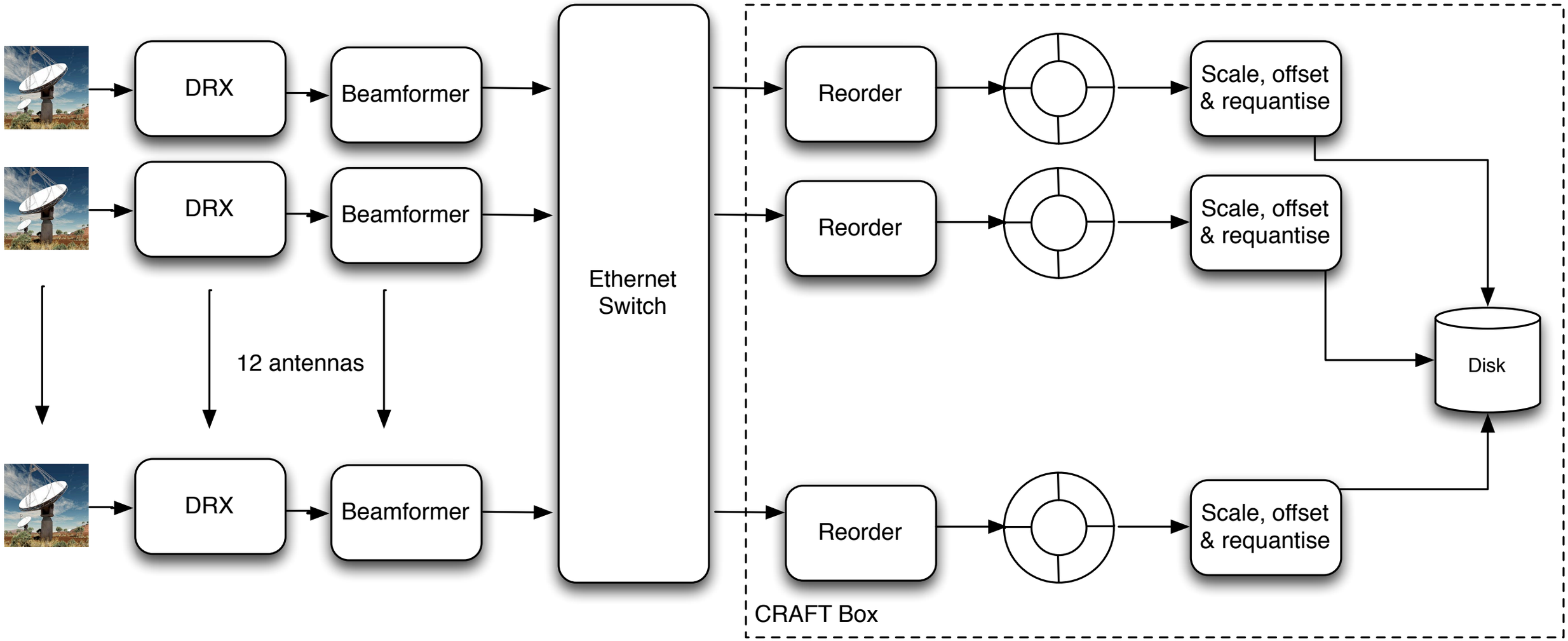

Vela Folded

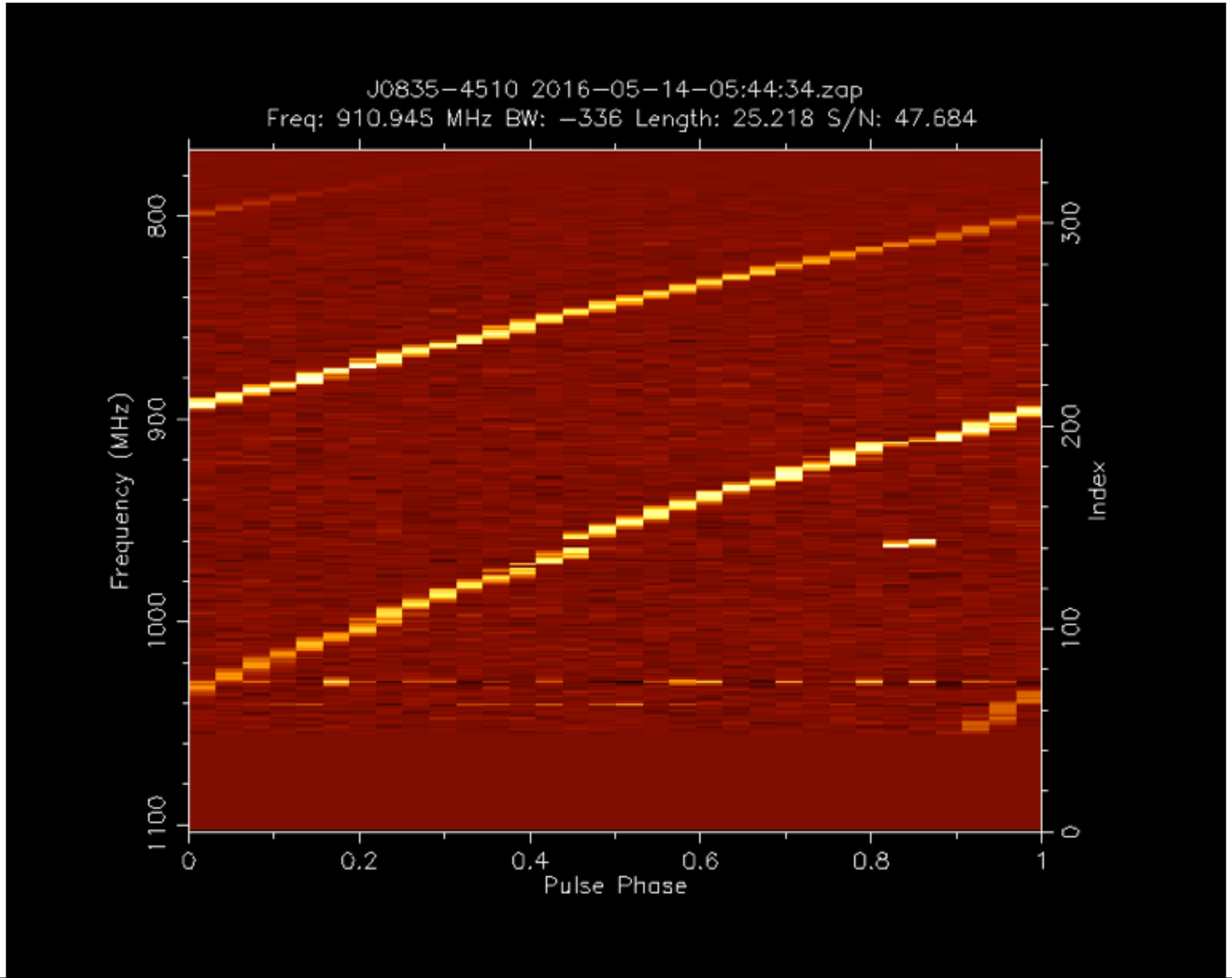
J0835−4510 2016−05−14−05:44:34.zap
Freq: 910.945 MHz BW: −336 Length: 25.218 S/N: 47.684
Frequency (MHz)
800
900
1000
1100
Index
0
100
200
300
0
0.2
0.4
0.6
0.8
1
Pulse Phase

Vela

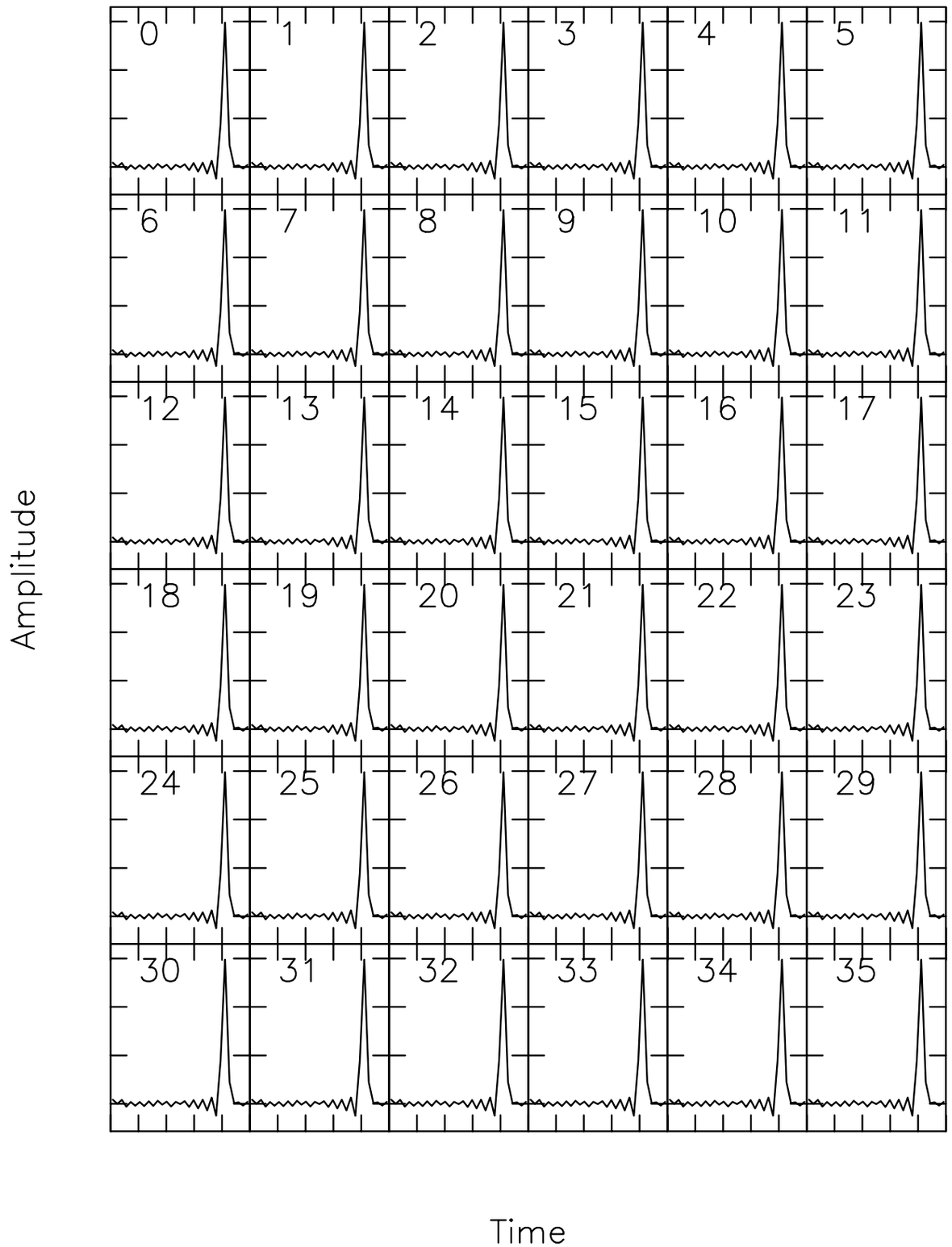
0
1
2
3
4
5
6
7
8
9
10
11
12
13
14
15
16
17
18
19
20
21
22
23
24
25
26
27
28
29
30
31
32
33
34
35
Amplitude
Time

Vela

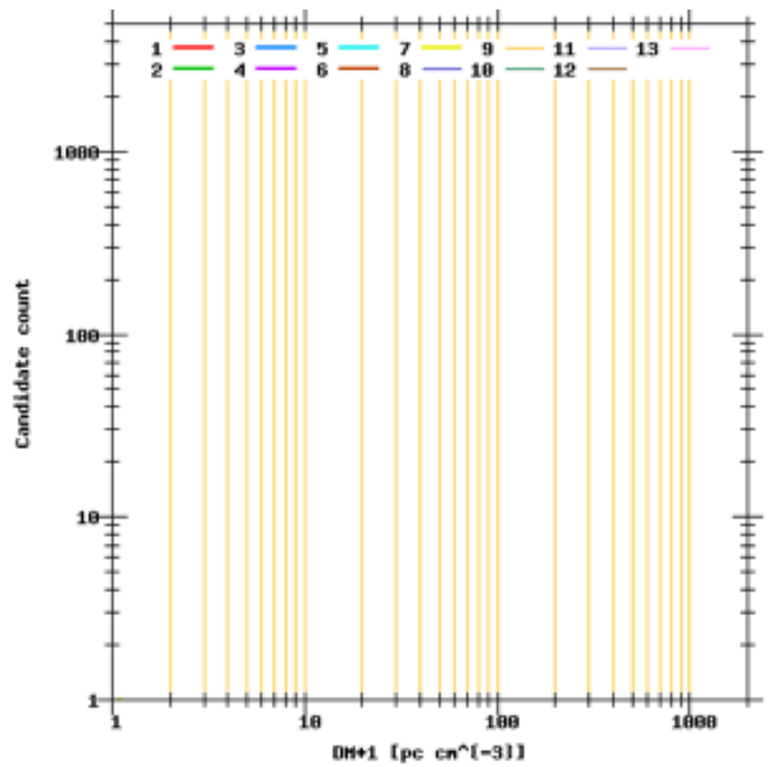
1 3 5 7 9 11 13
2 4 6 8 10 12
Candidate count
1000
100
10
1
1 10 100 1000
DM+1 [pc cm^[-3]]

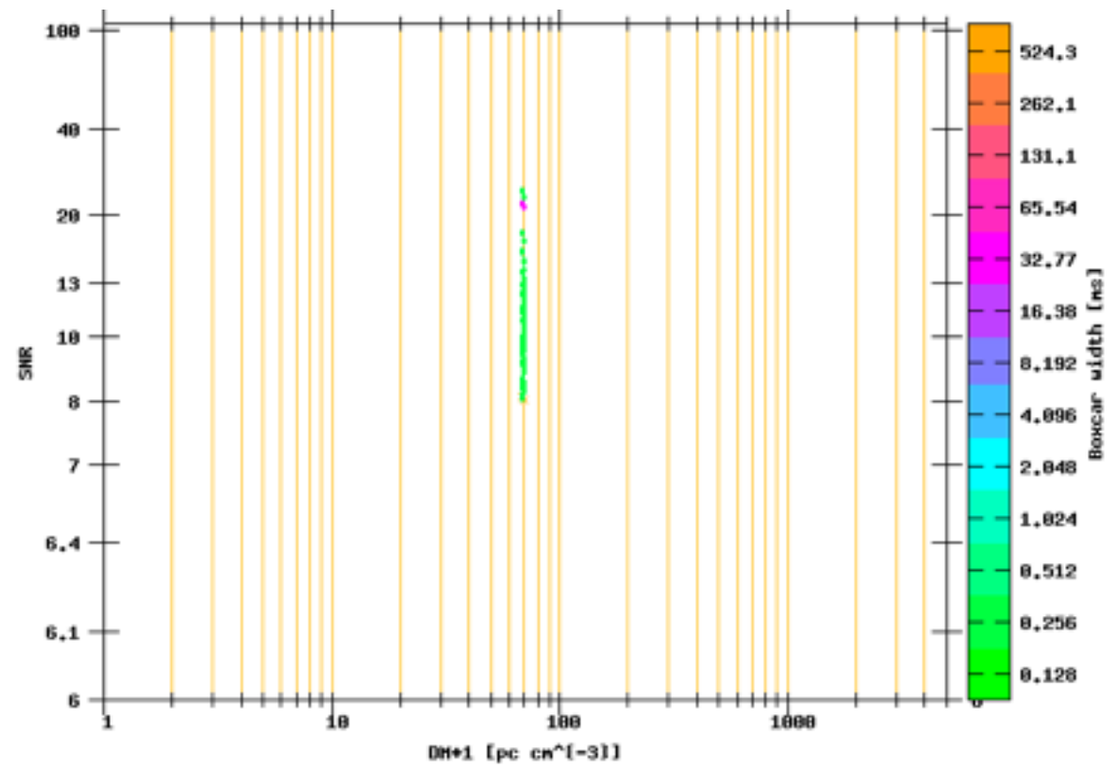
SNR
100
40
20
13
10
8
7
6.4
6.1
6
1 10 100 1000
DM+1 [pc cm^[-3]]
Boxcar width [ms]
524.3
262.1
131.1
65.54
32.77
16.38
8.192
4.096
2.048
1.024
0.512
0.256
0.128

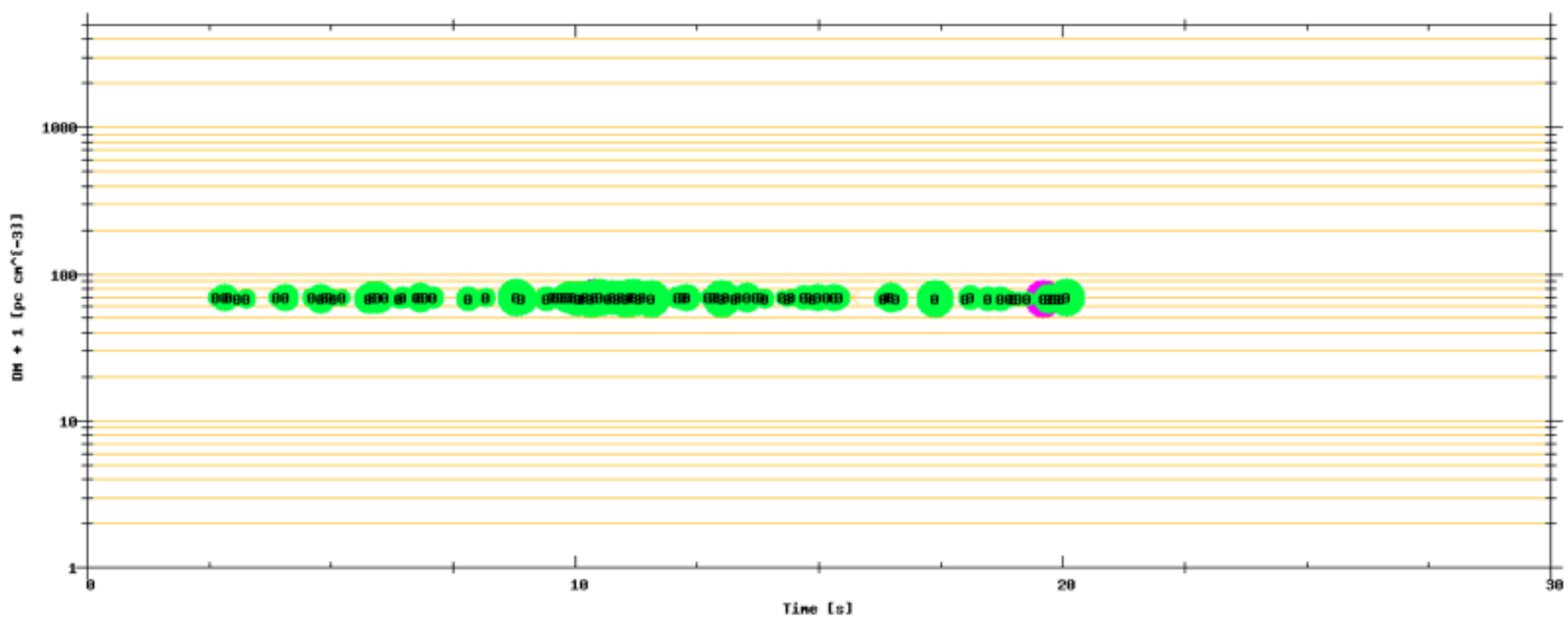
DM + 1 [pc cm^[-3]]
1000
100
10
1
0 10 20 30
Time [s]

CRAFT - The next step

- Real-time detection
- Stop transient voltage buffer
- Dump voltages to disk
- Correlate to get positions
- High time-frequency resolution

Transient Buffer

- Each beam former FPGA has 2 GB of memory for saving 8 MHz of bandwidth
- Native resolution is 32 bits (16 bits complex)
- Configurable truncation & rounding down to 16, 8, 4, 2 bits to increase buffer duration (no level setting)
- Configurable number of dual-pol beams: 36 or 1
- Full buffer download time: 96 s @ full rate
- Total Memory: 84 GB per antenna. 1.1 TB per 12 antennas
- Can choose a time range to download, aligned with BAT.
- Max dispersion time: 1000 pc/cm^3 = 1.6s assuming band 2 = 1-1.3 GHz.
- Say we download 2 s of data.

Example transient buffer modes

Nbits	Nbeams	Buffer Duration (s)	Download size 2s (GB)	Time to download 2s* (min)
32	36	0.75	1100	91**
8	36	3	733	61
32	1	27	81	7
8	1	108	20	2

* Assumes 200 MB/sec disk write speed
** To download 0.75s of data

CRAFT - the next step

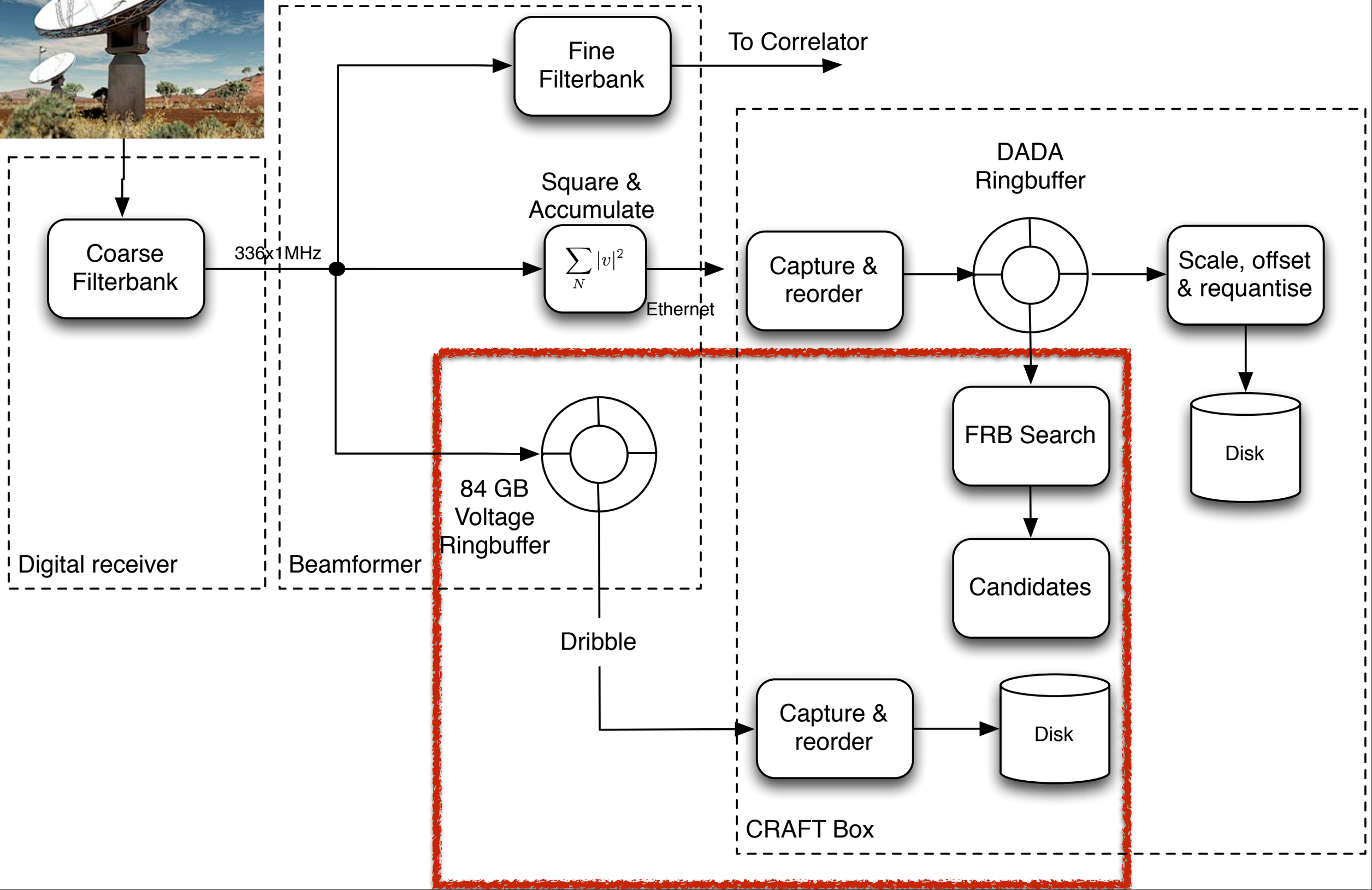

UTMOST and ASKAP-12

- The UTMOST FoV will covers slightly more than 1 ASKAP beam
- UTMOST ~ 1.3 times more sensitive than coherent ASKAP-12 (assuming 30 MHz, 300 K)
- 13 sigma @ UTMOST = 10 sigma @ ASKAP-12
- AKSAP-12 instantaneous beam: 19”x17” (uniform weighting, -30 dec)
- Localisation in 2D: ~ 2” (10 sigma)

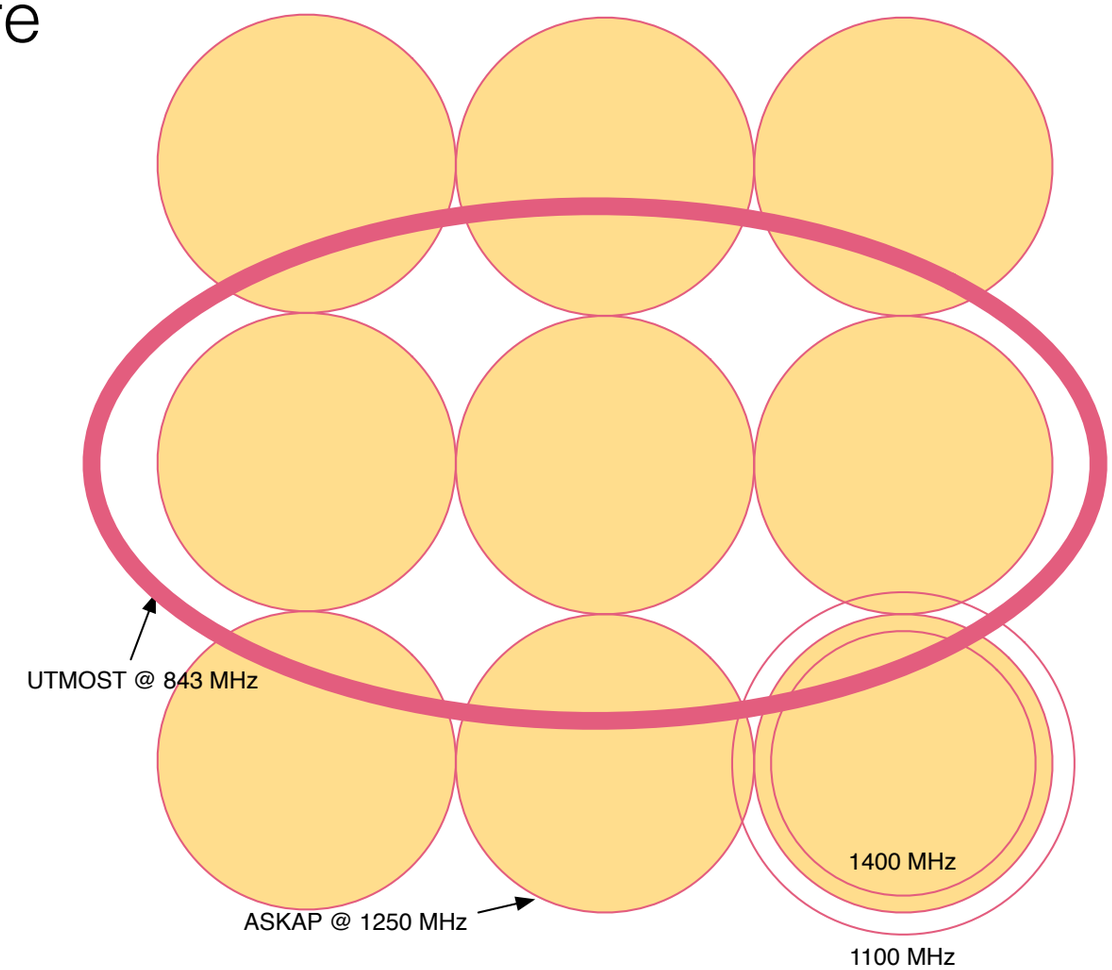

UTMOST detects & ASKAP locates

UTMOST shadows ASKAP pointing

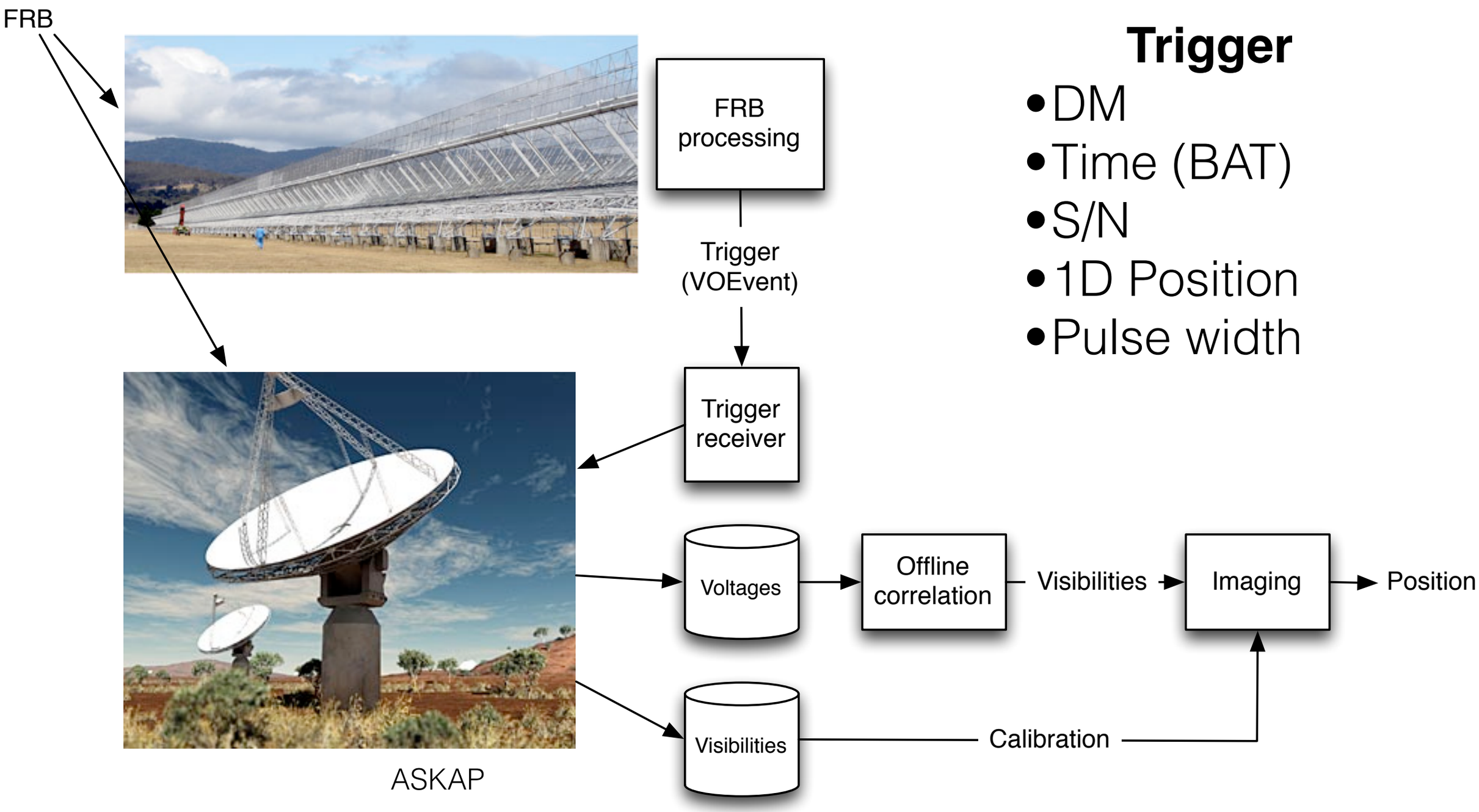

Trigger

- DM
- Time (BAT)
- S/N
- 1D Position
- Pulse width

Conclusions

- CRAFT team is gathering pace after a long hiatus.
- Firmware works well!
- Commissioning on-going.

Coming Clean on Commensal

~~C~~RAFT

- Design a dedicated tied-array mode for the ASKAP hardware correlator/ beamformer
- A lot like a zoom mode - only not a zoom mode
- Dedicated to tied-array / transients
- But sheesh, you'd get FRBs a go-go. If you could make all the beams: 6x improvement over standard CRAFT. 1.3x better than Parkes sensitivity with 50x the FoV
- More thought needed: Swallowing the data is a huge challenge, and may (in fact) be impossible
- e.g. For parity with the data rate of the current correlator, (6 GB/sec) we can only make ~20 tied-array beams

Parkes detects & ASKAP locates

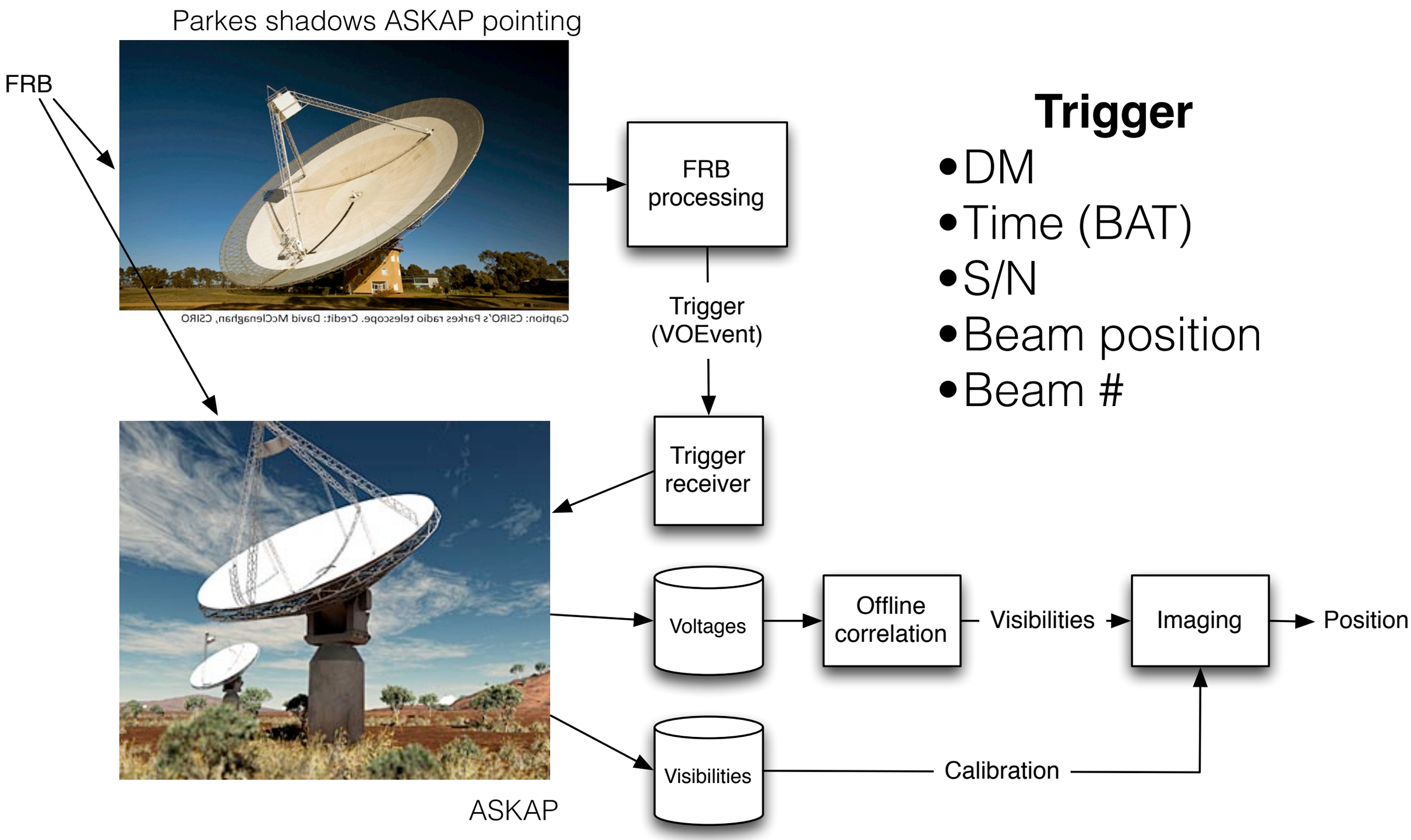

Trigger

- DM
- Time (BAT)
- S/N
- Beam position
- Beam #

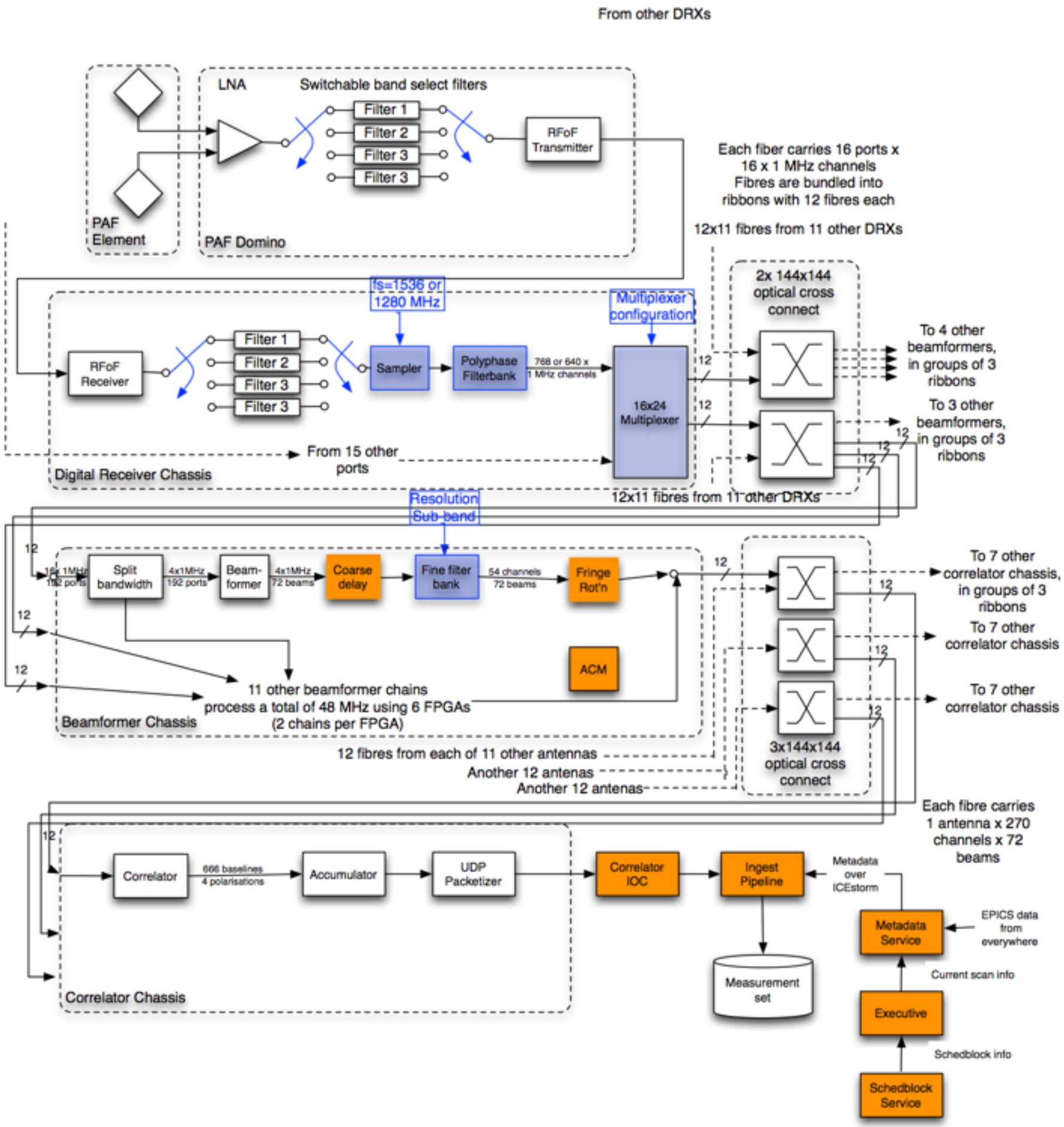
From other DRXs
PAF Element
LNA
Switchable band select filters
Filter 1
Filter 2
Filter 3
Filter 3
RFoF Transmitter
PAF Domino
Each fiber carries 16 ports x 16 x 1 MHz channels
Fibres are bundled into ribbons with 12 fibres each
12x11 fibres from 11 other DRXs
fs=1536 or 1280 MHz
Multiplexer configuration
2x 144x144 optical cross connect
RFoF Receiver
Filter 1
Filter 2
Filter 3
Filter 3
Sampler
Polyphase Filterbank
768 or 640 x 1 MHz channels
16x24 Multiplexer
12
12
To 4 other beamformers, in groups of 3 ribbons
To 3 other beamformers, in groups of 3 ribbons
From 15 other ports
Digital Receiver Chassis
12x11 fibres from 11 other DRXs
Resolution Sub-band
12
16x 1MHz 192 ports
Split bandwidth
4x1MHz 192 ports
Beam-former
4x1MHz 72 beams
Coarse delay
Fine filter bank
54 channels 72 beams
Fringe Rot'n
ACM
12
12
12
11 other beamformer chains
process a total of 48 MHz using 6 FPGAs
(2 chains per FPGA)
Beamformer Chassis
To 7 other correlator chassis, in groups of 3 ribbons
To 7 other correlator chassis
To 7 other correlator chassis
3x144x144 optical cross connect
12 fibres from each of 11 other antennas
Another 12 antenas
Another 12 antenas
Each fibre carries 1 antenna x 270 channels x 72 beams
Correlator
666 baselines 4 polarisations
Accumulator
UDP Packetizer
Correlator Chassis
Correlator IOC
Ingest Pipeline
Metadata over ICEstorm
Measurement set
Metadata Service
EPICS data from everywhere
Current scan info
Executive
Schedblock info
Schedblock Service