ATCA Broadband Backend

Warwick Wilson
CSIRO Australia Telescope National Facility

ATCA BROADBAND BACKEND

AIM:

To increase the maximum instantaneous bandwidth of the ATCA -

from 128MHz to 2GHz.

GAINS:

- Enhanced frequency coverage - up by factor 16
- Continuum sensitivity up by at least a factor of 4
- Increased flexibility - simultaneous spectral lines

COMPARISON: At λ = 3mm

CURRENT	NEW
Max. velocity coverage:	
300 Km/s	4800 Km/s
Velocity resolution at max. bandwidth:	
6.4 Km/s	1.5 Km/s
(60 chans)	(4000 chans)

INITIAL DESIGN PARAMETERS

- 2 frequencies, each with 2 polarisations
- 2 GHz maximum bandwidth
- Full range of lower bandwidths
- 4096 channels on all 4 Stokes parameters
- 8 stations
- 4 GSample/sec 4-bit samplers
- FX correlator architecture
- Digital Filter Banks

Total component costs: $A3.1M

MNRF2001

ATNF Component :

- Total capital : $A11.8M
  - SKA Prototype development
  - SKA Technology development
- 5 year project lifetime
  - Completion 2005/6

SYSTEM COMPONENTS

- Conversion system - LO/IF
- Samplers
- Data transmission
- Delay system
- Correlator
- Tied array
- Online software

SYSTEM COMPONENTS

- Conversion system - LO/IF
  - Single 2GHz analogue anti-aliasing filter
  - Interference supression filters where necessary

SYSTEM COMPONENTS

- Samplers
  - Fixed 4GS/s sample rate
  - Number of bits - 6 or 8 ???
  - Increased dynamic range
  - Correlator efficiency ~100%
  - Photonic sampling techniques ???

SYSTEM COMPONENTS

- Data transmission
  - ~128GBits/s from each antenna
  - New single mode fibre installed
- Correlator
  - Look forward to SKA
  - FX architecture

FX CORRELATOR

- Use filter bank to produce a spectrum of each IF signal.

- Cross Multiply corresponding frequency channels from all antennas/polarisations.

CORRELATOR ARCHITECTURE

- Polyphase Filterbank
  - 64k taps per filter
  - Clocked at 4GHz
  - FFT Clocked at 0.5MHz

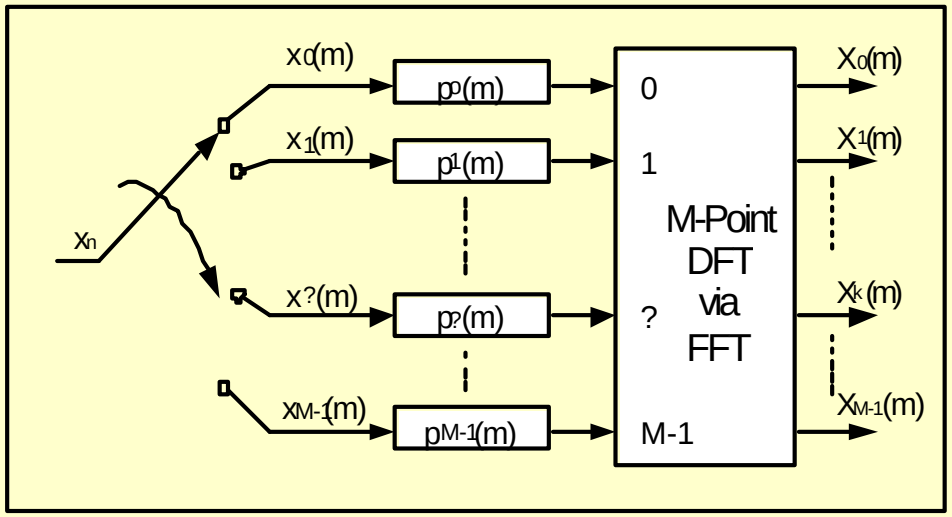

- COTS FPGAs
  - Endlessly reconfigurable

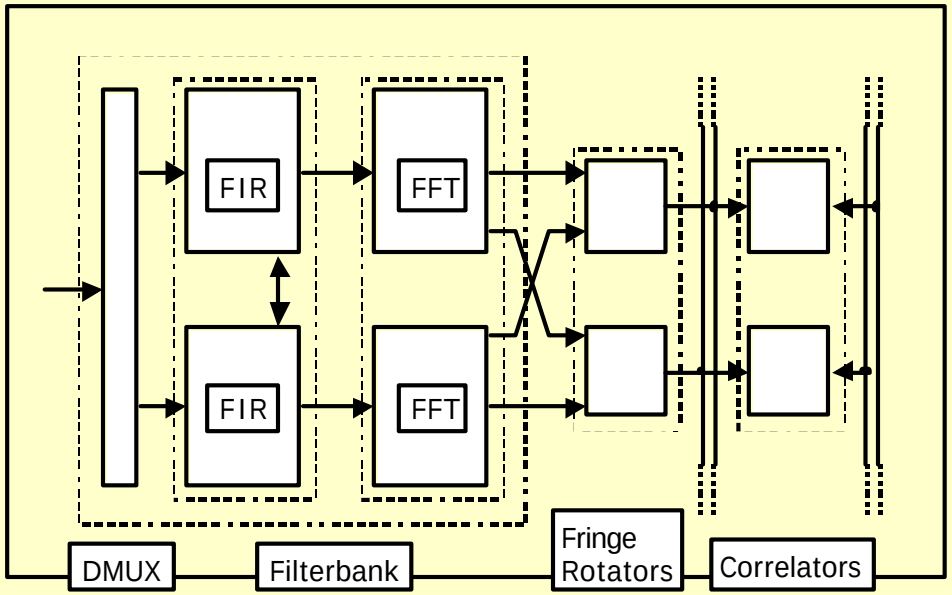

ZOOM

- Standard
- Zoom
- n*Zoom
- n*Zoom^m

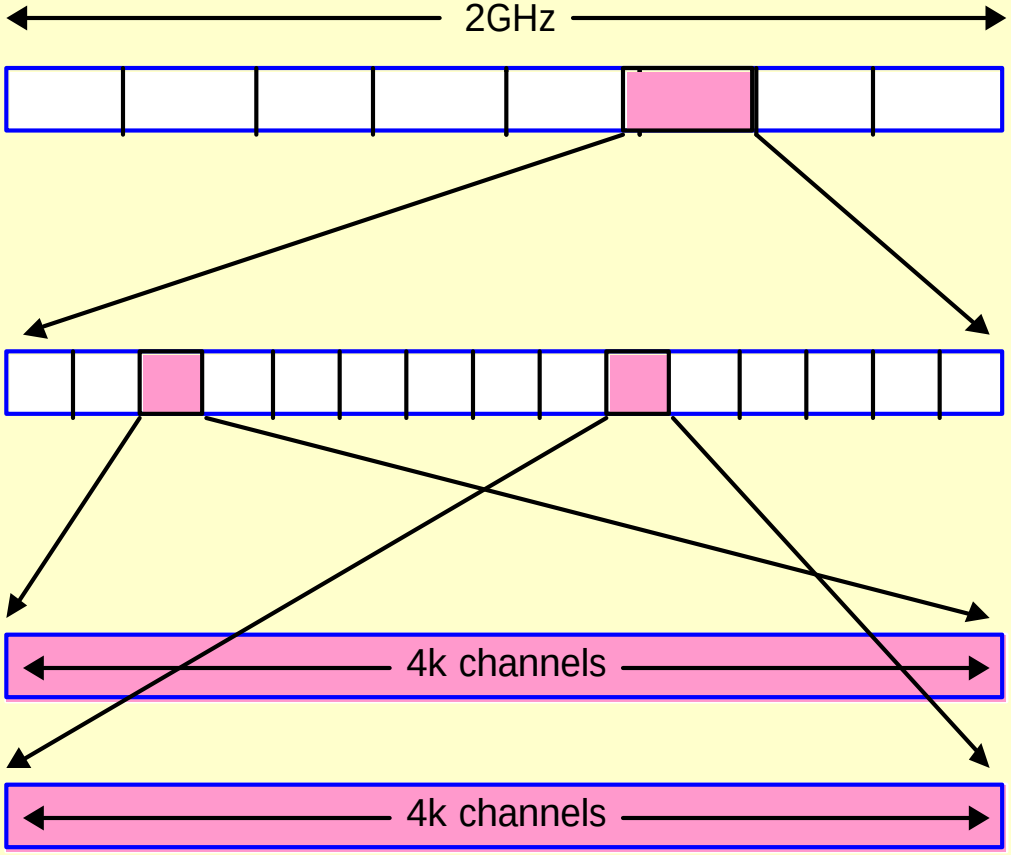

AUSTRALIA TELESCOPE NATIONAL FACILITY
CSIRO